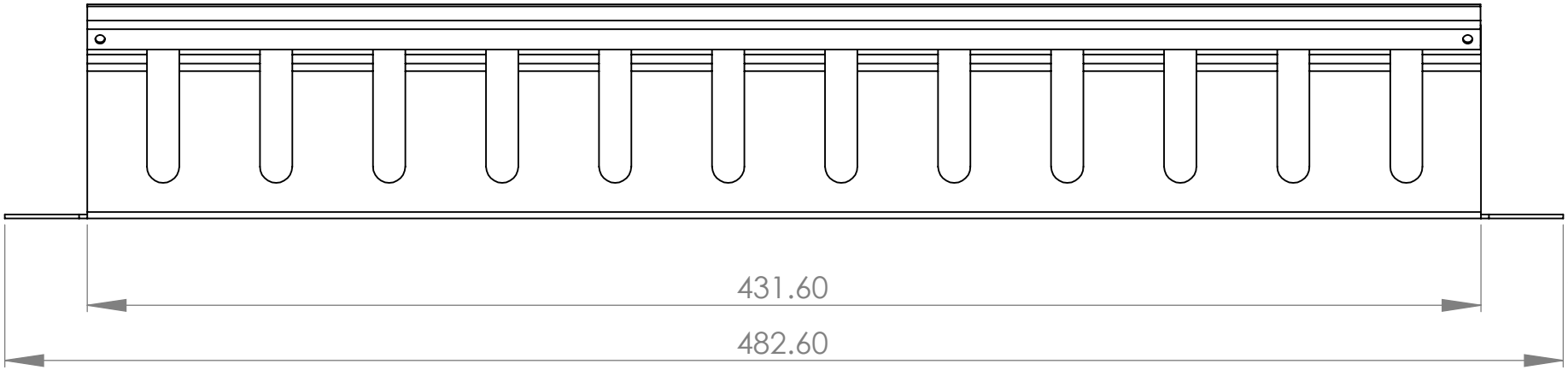

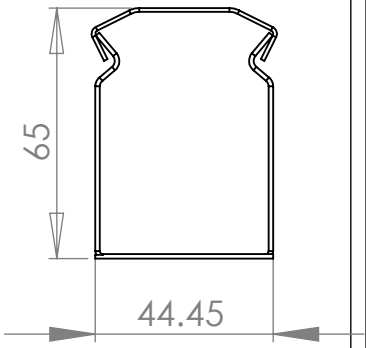

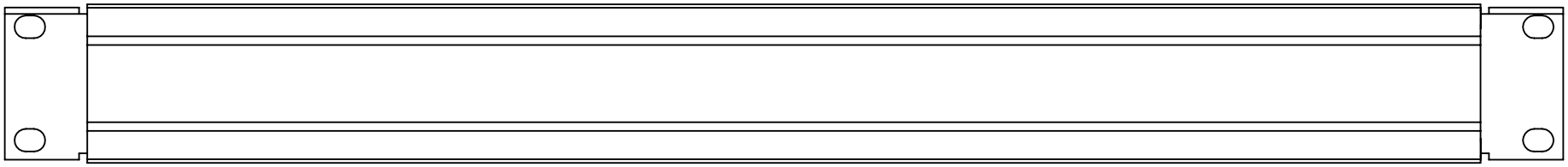

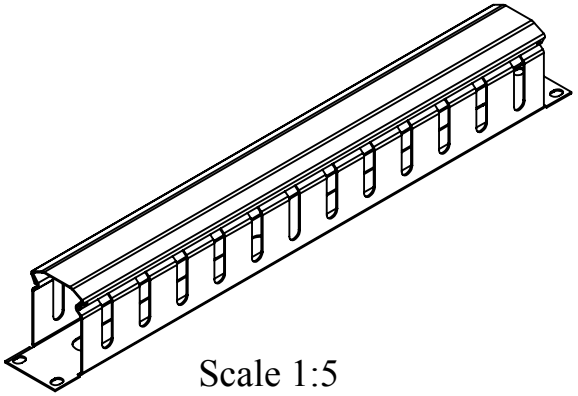

Scale 1:5

ANH MINH TECHNOLOGY COMPANY LIMITED-AMTEC CO.,LTD
17/3, Binh Quoi, Binh Chuan, Thuan An, Binh Duong, Viet Nam
Tel: (84-650) 3612177 Fax: (84-650) 3612178
Email: info@amtec.com.vn Web: www.amtec.com.vn

Customer: -	**Drawing tittle:** HORIZONTAL CABLE MANAGEMENT 1U, FINGER DUCT		**Part No:** AMHM-1F		
Design by: Nguyễn Xuân Hùng **Date:** 07-01-2012	**Checked by:** Lê Hoàng Tuấn **Date:** 07-01-2012		**Material:** SPCC t=1	**Scale:** 1:2	**Sheet No:** 01
Drawn by: Nguyễn Xuân Hùng **Date:** 07-01-2012	**Approved by:** Phan Quang Đức **Date:** 07-01-2012		**Qty/Job:** -	**Unit:** mm	
File name: -			**Drawing No:** 01		